MATILSA

AERIAL TRAILER MOUNTED PLATFORM ARTICULATED AND TELESCOPIC, FOR WORKING HEIGHTS UP TO 17 METER (55,70 FEET)

STANDARD MODEL:

* 230V main power
* Visual level for stabilisation
* Ball Coupling with inertia brake
* Aluminium Basket (1.1 x 0.6) m
* Hydraulic stabilizers
* Proportional controls
* Emergency lowering from the ground

CE
TÜVRheinland CERTIFIED
Management System ISO 9001:2008
www.tuv.com ID 9105060482

MATILSA

PARMA 17

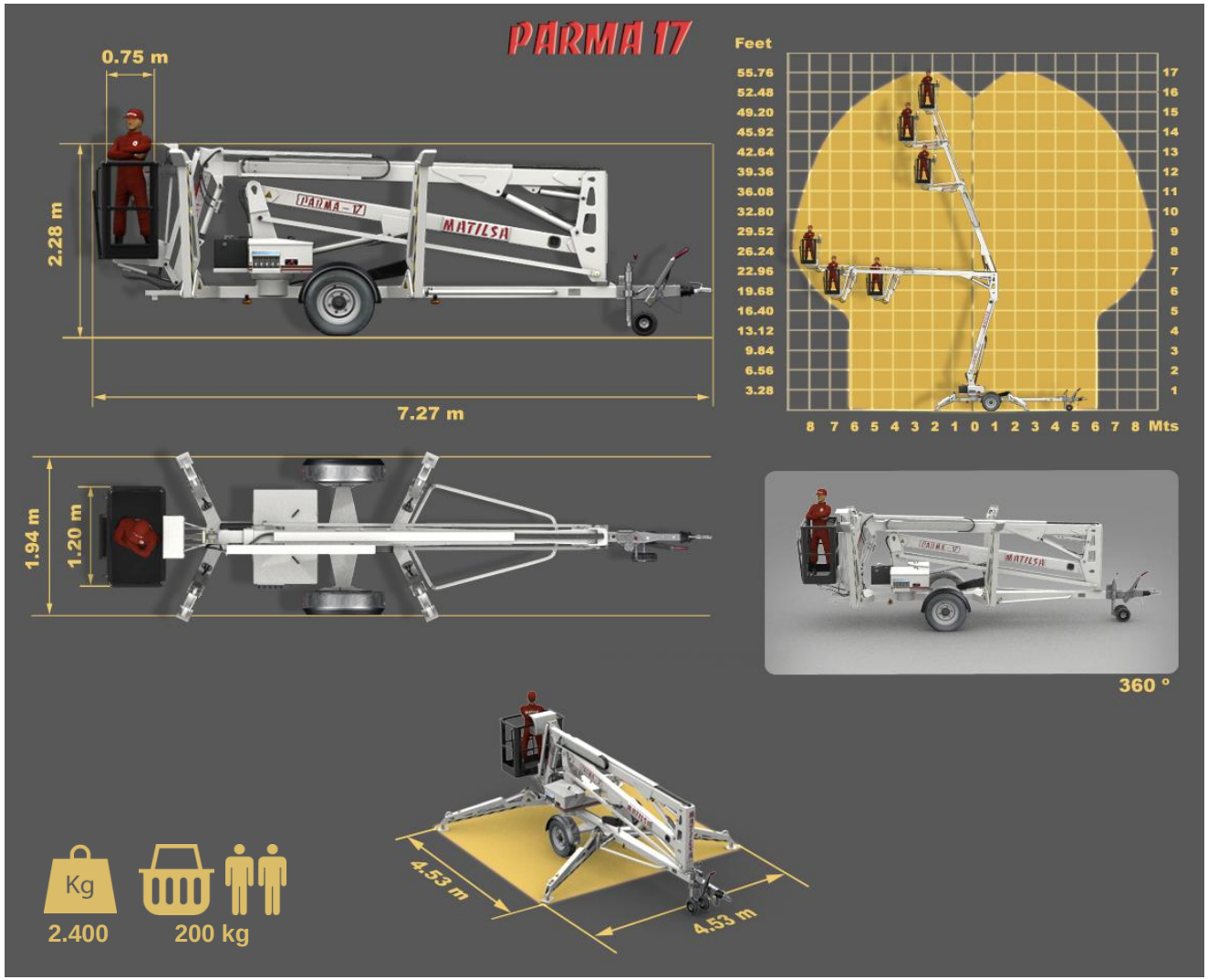

Optional accessories

1	Electric outlet in basket
2	Descent buzzer
3	Rotating light
4	Spare wheels
5	Lighting kit for roads
6	Hour meter
7	Bi energy: 230V + (Gasoline or Batteries)
8	Bi energy: 230V + Diesel Engine
9	Batteries main power
10	Bi energy: Batteries + Petrol Engine
11	Bi energy: Batteries + Diesel Engine
12	Charge indicator for batteries
13	Self driving system on wheels
14	Automatic self-leveling
15	Insulating basket
16	Aluminium basket 1,9m + basket load
17	Control weight in the basket
18	Emergency lowering from the basket
19	Hydraulic basket rotation 145º
20	Support pads (40 x 30)cm
21	Stabilizer for ball and ring coupling
22	Ring coupling